Industrial Chiller
User Manual

Thanks for your purchase of our product. To avoid the wrong operation, please keep the manual available and read the installation manual completely before operating the machine.

This manual is not a quality guarantee. Our company reserves the right to the interpretation of the correction of misprint and improperly described information and product improvement. The revised content will be edited into the reprinted user manual without prior notice.

GUANGZHOU TEYU ELECTROMECHANICAL CO., LTD.

Add: No.50, Zhongchuang Road, Zhongcun town, Panyu District, Guangzhou, China

Zip code: 511495

Email address: marketing@teyu.com.cn

Tel：+86-20-89301885 89301886

Fax：+86-20-84309967

original version

RMUP-500
Industrial Chiller
User Manual

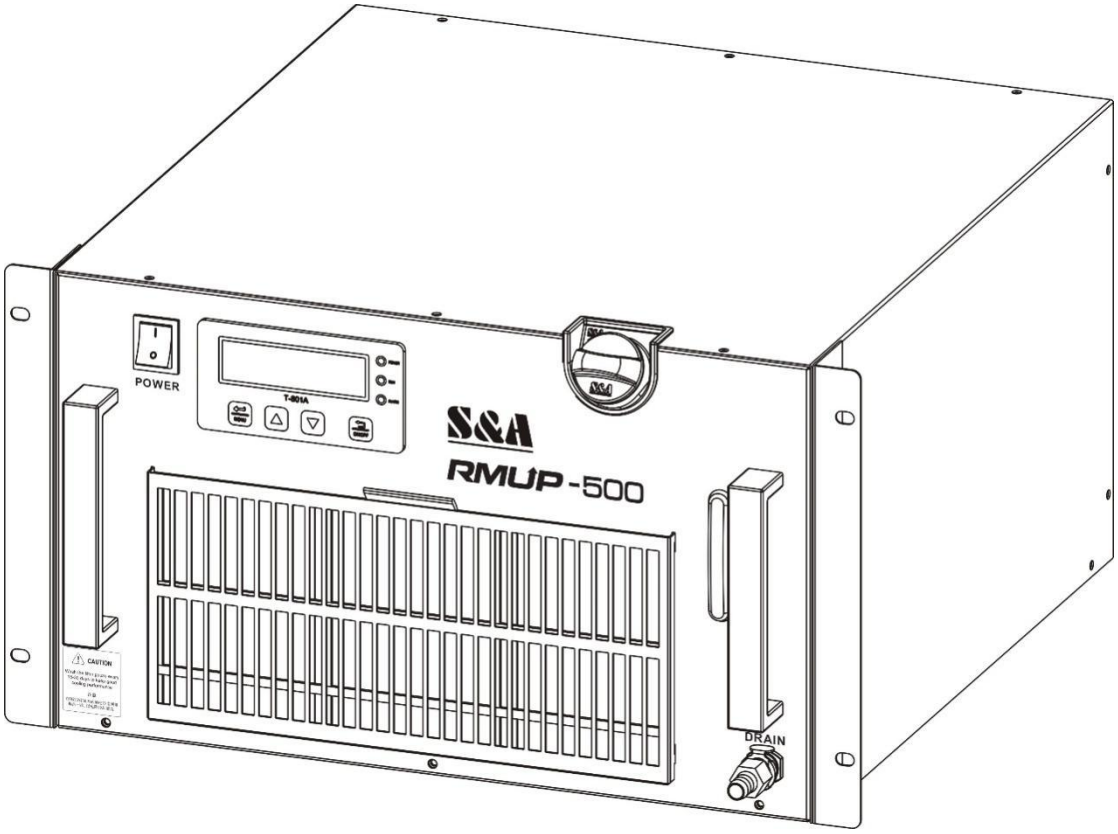

CONTENTS

Notice

This appliance can be used by children aged from 8 years and above and persons with reduced physical, sensory, or mental capabilities or lack of experience and knowledge if they have been given supervision or instruction concerning the use of the appliance in a safe way and understand the hazards involved. In order to ensure your personal safety and avoid property loss, you must pay attention to this manual, but not limited to the following warning notices. General electric knowledge and safety standards should also be followed.

DANGER Failure to take safety measures will result in death or serious personal injury.

Notice		Operation Guideline
Must-do	The Operation should be carried out by professional technicians	Handling, installation of pipes, electrical, operation, maintenance, overhaul and other operations must be carried out by personnel with professional knowledge. Children not play with the appliance.
Forbidden	It is forbidden to be used beyond the range of specification	It is forbidden to use the equipment beyond the range of manual specifications in order to avoid equipment damage, injury, fire, electric shock and other major accidents.
Forbidden	It is forbidden to be used in the explosive environment	It cannot be installed in dangerous places with flammable gas.
Must-do	Electrical connection	a) The power supply must conform to the standard indicated in the nameplate or the manual; b) Use the standard cable, and select the standard wire diameter; c) The grounding wire must be installed and the connection must be reliable; otherwise, it will cause an electric shock or fire.
	It is forbidden to operate the equipment without a cover	There are live parts inside the machine. It is forbidden to operate without a cover, as there is a risk of electric shock.
	Water-proof	Do not allow the equipment to be drenched or immersed in water, otherwise there may be a risk of short circuit and electric shock.
Must-do	Maintenance and repair	The operation must be carried out after 3 minutes of cutting off the power supply, because the high-voltage charging part in the equipment is not discharged within 3 minutes. Working in a live state or working immediately after shutdown will cause the risk of electric shock.
	Danger High Voltage	Contact with live parts can cause serious personal injury or death.

	Danger Hot Surface	The human body or the heat-labile articles must keep away from this high temperature area. Otherwise, it will cause personal injury or property loss.

DANGER Failure to take safety measures will result in death or serious personal injury.

Notice		Operation Guideline
Must-do	Transport and installation	The equipment must be firmly fixed during transport and installation. Otherwise, there will be a danger of tipping or falling.
Must-do	Electrical protection	The power cable terminal must be equipped with the electric leakage and overload protection device according to the rated current indicated on the equipment nameplate.
Must-do	Stop running in abnormal state	When the equipment is abnormal, as long as the cause is not clear, it is forbidden to start. Otherwise, there is a danger of damage, electric shock, fire, and injury.
Forbidden	Do not put fingers or other things into the gap of the equipment	There are rotating parts inside the device. Do not put fingers or other things into the gap of the equipment. Otherwise, it will cause personal injury.
Must-do	Refrigerant leakage	a) When the refrigerant leaks, please make sure that the ventilation is available. Otherwise, it may cause anesthesia and suffocation if a large amount of refrigerant fills the enclosed space; b) Avoid contacting with skin, or it will cause frostbite.

DANGER Failure to take safety measures will result in minor personal injury or property damage.

Notice		Operation Guideline
Forbidden	Transportation with liquid is prohibited	The equipment is not allowed to be transported with liquid to prevent internal pipeline leakage.
Must-do	Transport	a) The equipment should be fixed firmly before transportation to prevent the equipment from moving due to vibration and external forces. If there is excessive vibration and external force, the internal equipment may be damaged. b) Tilt angle should be ≤45°.Otherwise, the refrigeration system will fail.
Forbidden	Operating environment	a) It is forbidden to use in special environments such as high temperature, humidity, strong electromagnetic interference, etc. b) The equipment must be installed in a place where there is no direct sunlight and away from the fire sources.

Must-do	Installation	a) The equipment must be installed on a horizontal surface. Otherwise, the refrigeration system will fail; b) It is forbidden to place objects within 1meters around the air inlet and 1.5 meters around the air outlet. If the air inlet and the air outlet are blocked, the cooling ability that the equipment should have cannot be realized.
Must-do	Before commissioning	a) Make sure that the water supply pipe of equipment is not blocked; b) It is necessary to check the water pipe and the water pump to confirm that there is a proper amount of water entering the water pump and exhaust it through the water pump exhaust valve, otherwise it will cause damage to the water pump; c) Confirm that the state of the equipment is normal and safe, otherwise there may be injury and damage.
Warning	Gently move the motor impeller if the equipment isn't used for a long time	For equipment that has not been used for a long time, it may be difficult to start the pump at the first start. Please gently move the motor impeller before the equipment is powered on.
Forbidden	The equipment is forbidden to be trampled on	Please do not step on or sit on the equipment. Otherwise, it may cause injury accidents such as falling or overturning
Must-do	Clean the air filter regularly	Clean the air filter at least once a week. If it is blocked, the cooling ability will decrease and the power consumption will increase, and the alarm will not work properly.
Must-do	Equipment surface cleaning	a) Please use cleaning agents that are non-corrosive to metals and plastics; b) Please keep the cleaning agent properly after cleaning to prevent liquid leakage; c) The container for storing the cleaning agent must be sealed completely to avoid danger.
Forbidden	No air blowing at the water outlet	A temperature probe is installed inside the water outlet, and it is forbidden to blow air inside the device with an air gun.
Must-do	Wear protective gloves during maintenance, inspection and cleaning	a) The sharp edges of the condenser fins may cut the skin; b) The temperature of the internal compressor and refrigerant piping is very high, and direct skin contact may cause burns.
Must-do	Anti-freezing	a) When the ambient temperature is lower than 0℃ and the machine is shut down for a long time, it is necessary to drain the liquid and blow the water away in the system with compressed air, otherwise there is a danger of freezing and cracking the components and pipelines. b) When room temperature is lower than 0 ℃ , it is recommended to use antifreeze with a concentration of not more than 30% containing ethylene glycol or propylene

		glycol.

I. Overview

This product is an industrial cooling device designed and manufactured for laser cutting, laser welding, laser marking, laser engraving and other equipment that uses laser processing. It can provide a temperature-stable cooling medium for the above application scenarios.

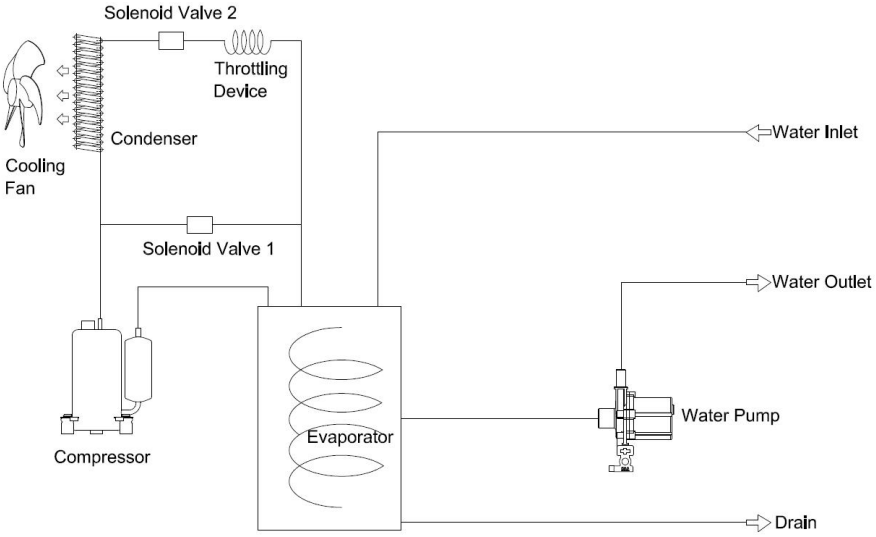

The chiller is composed of a compressor, a condenser, a throttling device (expansion valve or capillary), an evaporator, and a water pump. Its working principle is that the chiller's refrigeration system cools the water, and the water pump delivers the low-temperature cooling water to the equipment that needs to be cooled. Then the cooling water will take away the heat, heat up and return to the chiller, and then be cooled again and transported back to the equipment. In the refrigeration system of a chiller, the refrigerant in the evaporator coil absorbs the heat of the return water and vaporizes into steam. The compressor continuously extracts the generated steam from the evaporator and compresses it. The compressed high-temperature, high-pressure steam is sent to the condenser and later will release heat (heat extracted by the fan) and condense into a high-pressure liquid. After being reduced by the throttling device, it enters the evaporator to be vaporized, absorbs the heat of the water, and the whole process circulates constantly. Users can set or observe the working status of the water temperature through the temperature controller.

II. Model Illustration

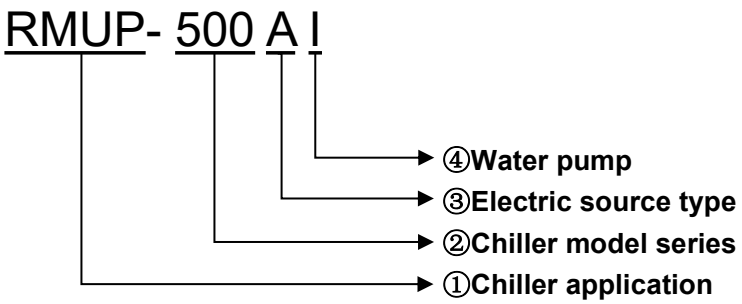

Note: This model description only contains the description of the company's main product codes, not all of them are listed. Please confirm with our company before ordering the specific model, our company has the final interpretation right about it.

III. Product Outlines & Parts

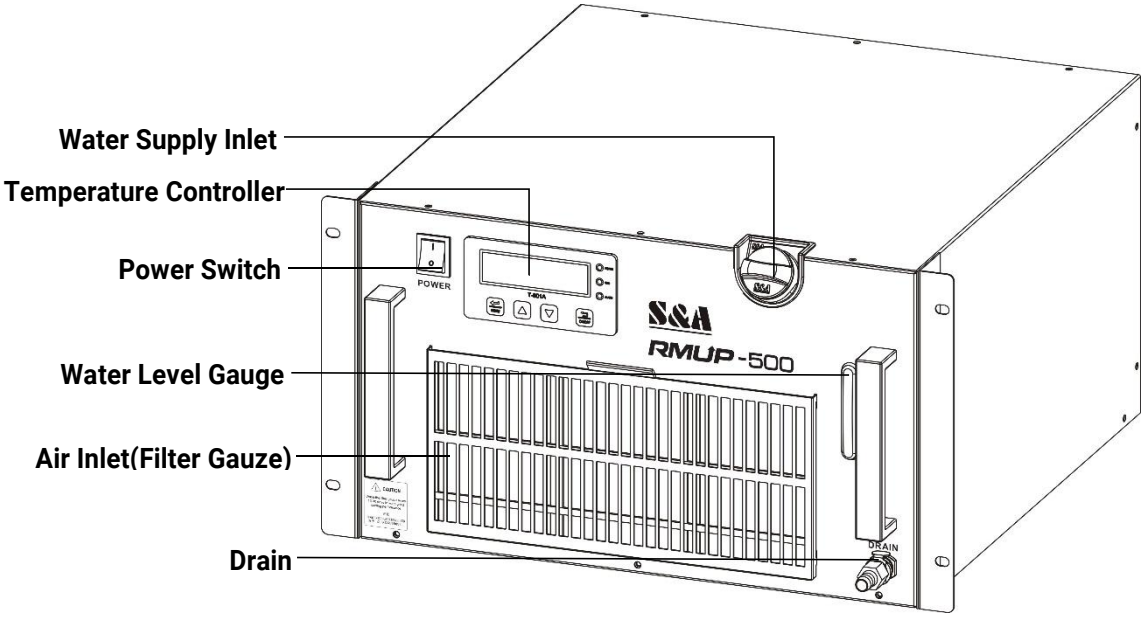

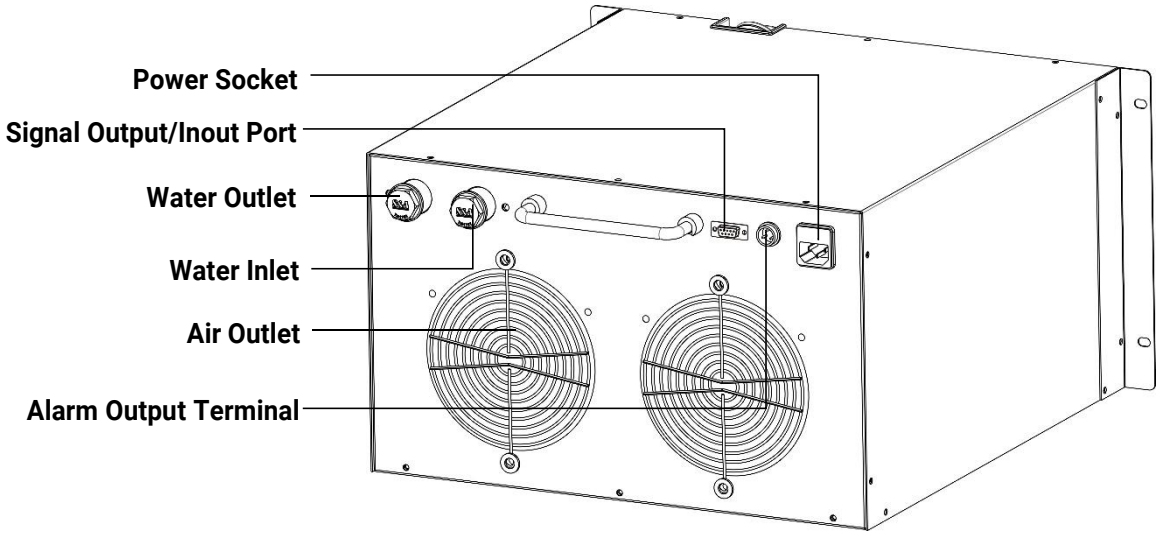

Note: The above-mentioned product outlines and part names are only for one of the models. The outlines and parts installation may be slightly different in different models.

IV. Installation

1. Open the package and check whether the machine is in good condition and whether the accessories are complete and in good condition .

2. Please ensure that the working voltage of the chiller is stable and normal.

Because the refrigeration compressor is sensitive to the power supply voltage, the normal working voltage of our company's standard products is 210~240V (110V model is 100~120V). If wider operating voltage range is necessary, customization is available.

3. Equipment installation conditions and requirements.

(1) It must be installed on a horizontal surface and not tilted.

(2) Do not install in harsh environments such as corrosive, flammable gas, dust, oil mist, conductive dust, high temperature and humidity, strong magnetic field, direct sunlight, etc.

(3) Operating Environment

Ambient Temperature	Ambient Humidity	Altitude
0~40℃	≤90%RH	≤3,000m

(4) Medium Requirements

Cooling medium allowed by the chiller includes purified water, distilled water, high-purity water and other softened water. It is forbidden to use oily liquids, liquids containing solid particles, corrosive liquids, etc. Clean the filter element and replace the cooling water regularly (about three months is recommended) to ensure the normal operation of the chiller.

When the chiller is stored with water at room temperature lower than 2℃, it is necessary to add anti-freezer in the chiller water tank. It is recommended to use antifreeze with a concentration of not more than 30% containing ethylene glycol or propylene glycol. After the temperature warms up, change to purified water, distilled water or other suggested cooling media, let the chiller run for 30 minutes to remove the residual antifreezer and drain it, and then refill with unused circulating water.

(5) This chiller has front air inlet. In order to ensure the operation performance, it is recommended that the air inlet of the associated cabinet is not less than 1.3 times the area of the air inlet of the chiller; the reserved diameter of the air outlet should not be lower than the diameter of the chiller fan and keep the same horizontal position, or an air duct no less than the diameter of the fan is added to ensure good ventilation from the air outlet.**WARNING: Do not locate multiple portable socket-outlets or portable power supplies at the rear of the appliance.**

4. Determine the direction of the pipeline layout according to the water inlet and outlet of the chiller, and ensure that the waterway is clean and free of impurities, so as to prevent impurities from entering the waterway and causing blockage or pump failure.

5. Plug in the power cord and turn on the power switch(It is forbidden to start without water).

WARNING: When positioning the appliance, ensure the supply cord is not trapped or damaged.

(1) After turning on the power switch, the circulating pump of the chiller starts to work. When the new machine is turned on for the first time, there will be more air bubbles in the pipeline, which will cause the machine to alarm occasionally, and it will return to normal after a few minutes of operation.

(2) After starting the machine for the first time, check if the water pipes leaks immediately.
(3) After turning on the power, if the water temperature is lower than the set temperature, it is normal that the cooling fan and other devices of the machine do not work. The temperature controller will automatically control the working status of compressors, solenoid valves, cooling fans and other components according to the set parameters.

6.Electrical connection.

(1) Please select the cable based on the max. rated current indicated on the label of the chiller.
(2) Recommended reference standard for power cord diameter selection.

Rated current/ A	≤5	≤10	≤15	≤25	≤35	≤50
Wire diameter (copper wire)/ mm²	1.0	1.5	2.5	4.0	6.0	10.0

Note: This data is provided according to IEC 60204-1 standard and only for reference. Standard cables must be used in the power cord.

(3) The main circuit of the power supply must be equipped with appropriate electric leakage and overload protection devices, and the chiller must be well grounded.
(4) Less than ±10% of power supply voltage fluctuation and less than ±1Hz of frequency fluctuation are allowed, and keep away from electromagnetic interference sources.

7. Fill Water & Exhaust Air.

(1) Fill Water
After the new machine is turned on, the air in the water pipe is emptied, and the water level of the water tank will drop slightly. In order to keep the water level in the green area, you can add water again. Observe and write down the current water level. After the chiller has been running for a period of time, observe the water level gauge again. If the water level drops significantly, check again if there is leakage in the water pipes.

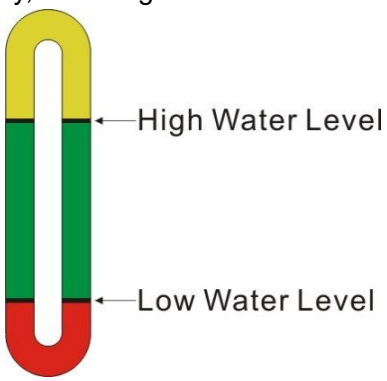

(2) Exhaust Air
After adding water for the first time or replacing water, exhaust the air in the water pump to start use, otherwise the equipment will be damaged. The exhaust method is as follows：
Method 1: Under the state of shutting down, after adding water, remove the water outlet and connect the water pipe, drain for 2 minutes, and then install it firmly.
Method 2： Open the water supply inlet, after starting the machine (water flows), repeatedly press and fold the water pipe several times to drain the air from the pipe.

8.Test-run Check.

(1) Check whether the pipeline connection is correct, and there must be no bubbling or water leakage;
(2) Check whether the inlet and outlet water ball valves are open and the drain valve is closed;

(3) Check the liquid level of the water tank;
(4) Confirm that the electrical wiring of the equipment is connected correctly;
(5) Confirm whether the equipment is grounded.

V. Operating States &Parameters Adjustment

Default setting of T-801B new model intelligent temperature controller is Intelligent temperature mode, water temperature is setting 25 ℃ , customer could adjust the temperature according to requirement.

1.Temperature controller panel introduction

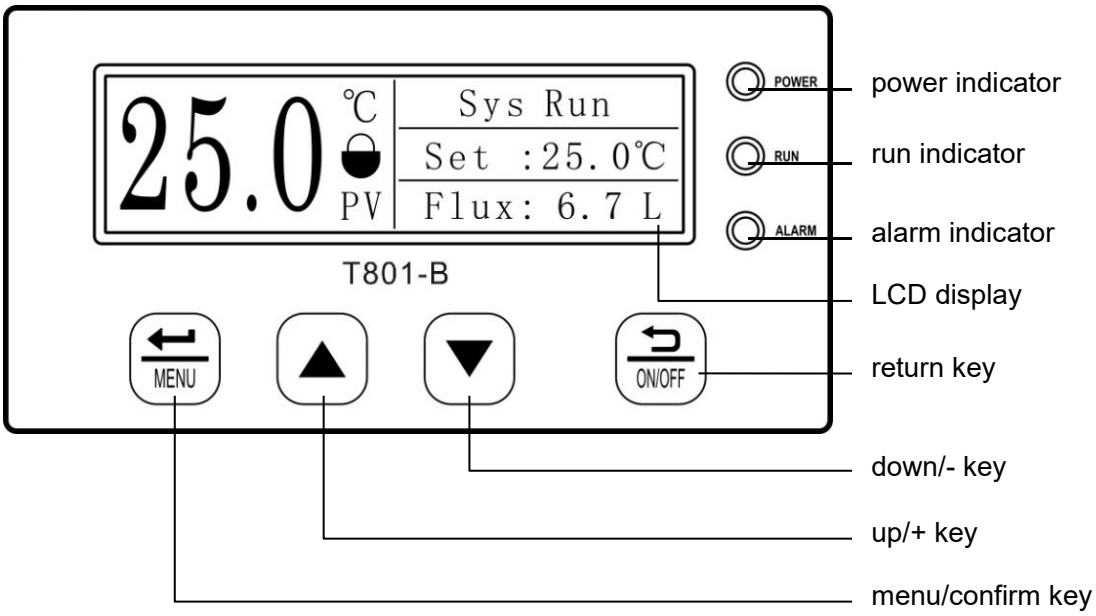

2. Parameter setting

After pressing "menu" in the main interface, enter the main menu interface, press "up" and "down" to select the sub-menu, press "menu" to enter the sub-menu, and press "return" to return to the upper menu. After entering the root menu, press "up" and "down" to adjust the parameter value, and press "menu" to save the parameter. If the key is not pressed within 10 seconds during the setting process, it will automatically return to the main interface.

（1）Password table

Parameter category	Password
Administrators Parameter	359
Reset Parameter	999

（2）Parameter setting table

Parameter name	Unit	Value range	Remarks	Attributes	Parameter address (decimal)	Function code (decimal)
Temperature setting	℃	-20.0~70.0	*10	R/W	47	03 Function code，06 Function code，
Heating difference	℃	-5.0~8.0	*10		48	
Compressor starting temperature difference	℃	0.1~8.0	*10		49	
Compressor stop	℃	0.0~8.0	*10		50	

temperature difference						16 Function code
Following temperature difference	℃	-20.0~20.0	*10		51	
Start/stop mode	1-Power on start;		*1		52	
Upper temp. limit alarm	℃	25.0~80.0	*10		53	
Lower temp. limit alarm	℃	-25.0~20.0	*10		54	
Lower flow rate limit protection	L/Min	0~90.0	*10		55	
Flow Switch type	0-normally open type; 1-normally closed type		*1		56	
Alarm output type	0-normally open type; 1-normally closed type		*1		57	
Flow detection delay	second	0~300	*1		58	
Comp start delay	second	10~600	*1		59	
System start/stop mode	0-Local control		*1		60	
DI1 input function	0-Water level switch; 1-Compressor overload; 2-Pump overload; 3-Power failure		*1		61	
DI1 input type	0-normally open type; 1-normally closed type		*1		62	
Mode selection	0-constant temperature mode 1-intelligent mode		*1		63	
Model selection	0-Single cold type; 1-Thermostatic type		*1		64	
Temperature following the upper limit	℃	25.0~45.0	*10		65	
Temperature following the lower limit	℃	0.0~25.0	*10		66	
Standby antifreeze enabled	0-Disable; 1-Enable		*1		67	
Shutdown temperature difference of constant temperature	℃	0.0~10.0	*1		68	
State transition delay	second	0~99	*1		69	

VI. Alarm & Output Terminal

In order to guarantee the equipment will not be affected while abnormal situation happens to the chillers, the chillers are designed with alarm protection function.

1. Alarm and MODBUS RS-485 communication output wiring diagram.

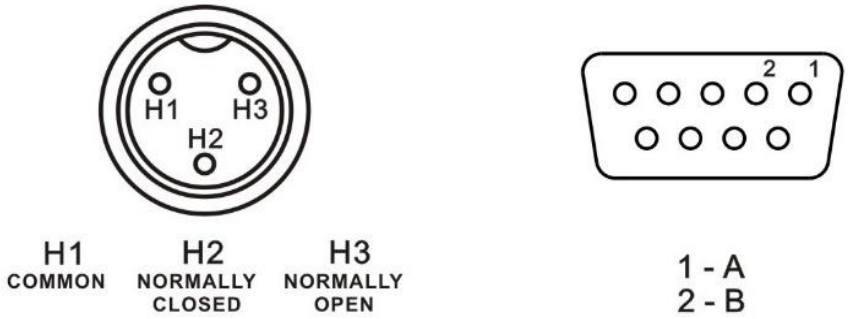

H1, H2 and H3 are alarm signal output terminal; 1 and 2 are MODBUS RS-485 communication output terminal.

2. Working condition table of alarm signal

Display / working status	Buzzer	Input port H1、H2	Output port H1、H3
Circulation pump works properly		Disconnection	Breakover
Media temperature sensor failure	Sounds	Breakover	Disconnection
Ambient temperature sensor failure	Sounds	Breakover	Disconnection
Flow rate protection	Sounds	Breakover	Disconnection
Liquid level protection	Sounds	Breakover	Disconnection
Upper temperature limit alarm	Sounds	Breakover	Disconnection
Lower temperature limit alarm	Sounds	Breakover	Disconnection
Lower flow rate limit protection	Sounds	Breakover	Disconnection
Abnormal system operation	Sounds	Breakover	Disconnection
Interruption of chiller power supply		Breakover	Disconnection

Note: The alarm output port is connected with a set of normally open and normally closed contacts of the relay inside the machine. The working current should be smaller than 3A while the working voltage should be smaller than 300V.

VII. Maintenance

The equipment must be shut down for maintenance, and the power supply must be cut off. The operation can only be carried out after 3 minutes, otherwise there will be a risk of electric shock. Cleaning and user maintenance not be made by children without supervision.

When the room temperature is lower than 2°C, the internal water must be drained when the machine is shut down for a long time.

Regularly disassemble the filter gauze for cleaning and use a compressed air gun to blow away the dust on the condenser (about 1 week is suggested and the air filter must not be missing for a long time).

VIII. MODBUS RS-485 communication function

This system adopts MODBUS-RTU communication slave mode, baud rate 9600, no parity, 8 data bits, 1 stop bit, and supports MODBUS-RTU command.

Description		Value range	Remarks	Attributes	Parameter address (decimal)	Function code (decimal)
Output switching value	Bit0: alarm			R	0	01 Function code
	Bit1: electric heating					
	Bit2: compressor					
	Bit3: heating valve					
	Bit4: cooling valve					
Input switching value	Bit0: flow switch			R	0	02 Function code
	Bit1: multi-purpose input					
Restore factory default		1	*1	W	15	03 Function code, 06 Function code, 16 Function code
System status	0x02: power on					
	0x03: fault					
Error code	0: normal and no fault			R	29	
	1: ambient temperature sensor failure					
	2: media temperature sensor failure					
	8: power failure					
	9: power reverse phase protection					
	10: liquid level protection					
	13: flow protection					
	16: pump overload					
	17: flow lower limit protection					
	18: compressor overload					
	33: abnormal system operation					
	45: temperature upper limit alarm					
	54: lower temperature limit alarm					
System uptime	Unsigned integer		*1	R	30	
Compressor uptime	Unsigned integer		*1	R	34	
Local address			*1	R/W	37	
Media			*10	R	0	04

temperature						Function code
Media traffic			*10		1	
Ambient temperature			*10		2	

IX. Simple Troubleshooting

Phenomenon	Reason	Solution
No power after turned on	Power cord is not plugged in place.	Check and ensure the power interface and the power plug are well plugged.
	Fuse burnt-out.	Replace fuse tube that in the electric box at the back of chiller
Flow alarm，use a water pipe connect the water outlet and inlet but without water flowing.	Low water level in the water tank.	Check the water level gauge indicator, pour water until the water meet green area; and check whether water circulation pipe leaks.
Flow alarm occurs while running with applied equipments, but there is water flowing without alarm when use a water pipe directly connected to the water outlet and inlet.	Water circulation pipes are blocked or a pipe bending.	Check water circulation pipes.
Upper temperature limit alarm	Anti-dust gauze accumulated heavy dust leading to poor heat dissipate.	Remove the anti-dust gauze and clean it regular.
	Poor ventilation for air outlet or inlet.	Make sure good ventilation for air outlet and inlet.
	Over low or unstable voltage.	To improve the power supply circuit or use a voltage regulator.
	Error parameter setting of temperature controller.	Resetting parameter or restore to default setting.
	Chiller On/Off frequently	To make sure chiller have enough time to refrigeration (about 5 minutes above).
	Heat overload	Reduce heat overload, or use larger refrigeration capacity chiller.
Condensate water heavily.	Water temperature is much lower than ambient temperature, high humidity.	To increase water temperature or to keep warm for pipeline.
Water drains slowly from outfall when changing water.	Water Supply Inlet not open.	To open water supply inlet.