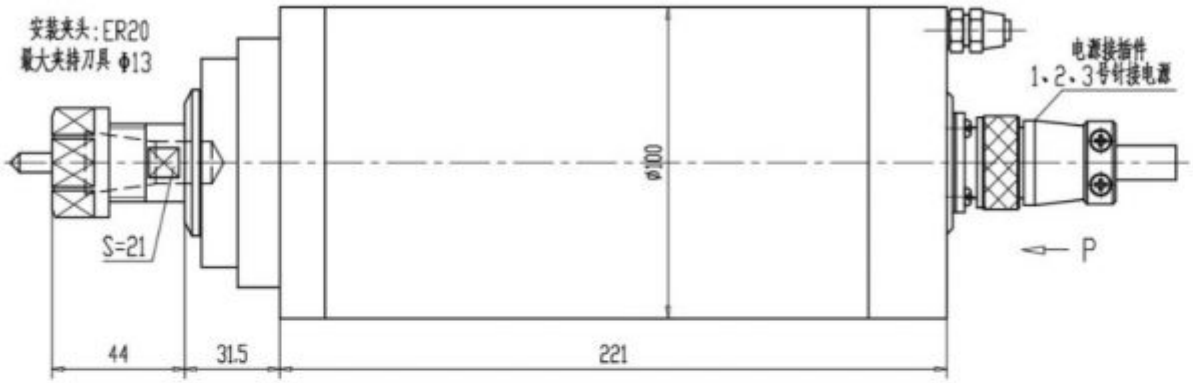
安装夹头:ER20
最大夹持刀具 φ13
S=21
φ100
电源接插件
1、2、3号针接电源
P
44
31.5
221

P向
冷却水进
软管φ6Xφ8
冷却水出
软管φ6Xφ8

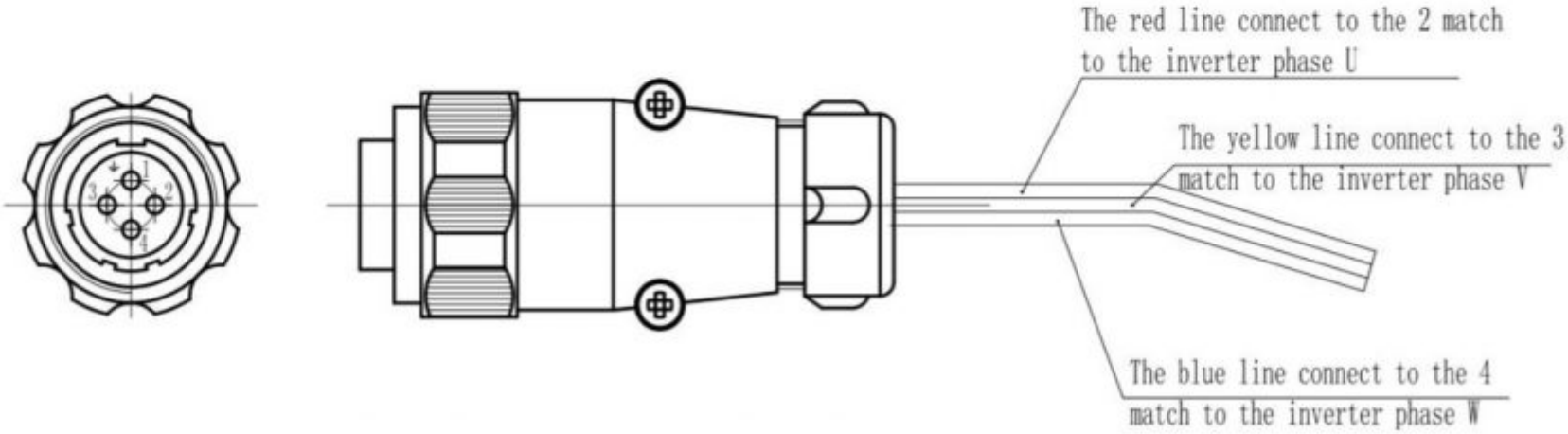
The red line connect to the 2 match
to the inverter phase U
The yellow line connect to the 3
match to the inverter phase V
The blue line connect to the 4
match to the inverter phase W